CCGPS Frameworks Student Edition

Mathematics

8th Grade

Unit 1: Transformations, Congruence, and Similarity

Dr. John D. Barge, State School Superintendent

"Making Education Work for All Georgians"

The contents of this guide were developed under a grant from the U. S. Department of Education. However, those contents do not necessarily represent the policy of the U. S. Department of Education, and you should not assume endorsement by the Federal Government.

Unit 1
Transformations, Congruence, and Similarity

TABLE OF CONTENTS

OVERVIEW

In this unit students will:

- develop the concept of transformations and the effects that each type of transformation has on an object;
- explore the relationship between the original figure and its image in regards to their corresponding parts being moved an equal distance which leads to concept of congruence of figures;
- learn to describe transformations with both words and numbers;
- relate rigid motions to the concept of symmetry and to use them to prove congruence or similarity of two figures;
- physically manipulate figures to discover properties of similar and congruent figures; and
- focus on the sum of the angles of a triangle and use it to find the measures of angles formed by transversals (especially with parallel lines), find the measures of exterior angles of triangles, and to informally prove congruence.

Although the units in this instructional framework emphasize key standards and big ideas at specific times of the year, routine topics such as estimation, mental computation, and basic computation facts should be addressed on an ongoing basis. Ideas related to the eight practice standards should be addressed constantly as well. To assure that this unit is taught with the appropriate emphasis, depth, and rigor, it is important that the tasks listed under "Evidence of Learning" be reviewed early in the planning process. A variety of resources should be utilized to supplement this unit. This unit provides much needed content information, but excellent learning activities as well. The tasks in this unit illustrate the types of learning activities that should be utilized from a variety of sources.

STANDARDS ADDRESSED IN THIS UNIT

Mathematical standards are interwoven and should be addressed throughout the year in as many different units and activities as possible in order to emphasize the natural connections that exist among mathematical topics.

KEY STANDARDS

Understand congruence and similarity using physical models, transparencies, or geometry software.

MCC8.G.1 Verify experimentally the properties of rotations, reflections, and translations:

a. Lines are taken to lines, and line segments to line segments of the same length.

b. Angles are taken to angles of the same measure.

c. Parallel lines are taken to parallel lines.

MCC8.G.2 Understand that a two-dimensional figure is congruent to another if the second can be obtained from the first by a sequence of rotations, reflections, and translations; given two congruent figures, describe a sequence that exhibits the congruence between them.

MCC8.G.3 Describe the effect of dilations, translations, rotations, and reflections on two-dimensional figures using coordinates.

MCC8.G.4 Understand that a two-dimensional figure is similar to another if the second can be obtained from the first by a sequence of rotations, reflections, translations, and dilations; given two similar two-dimensional figures, describe a sequence that exhibits the similarity between them.

MCC8.G.5 Use informal arguments to establish facts about the angle sum and exterior angle of triangles, about the angles created when parallel lines are cut by a transversal, and the angle-angle criterion for similarity of triangles. *For example, arrange three copies of the same triangle so that the three angles appear to form a line, and give an argument in terms of transversals why this is so.*

STANDARDS FOR MATHEMATICAL PRACTICE

Refer to the Comprehensive Course Overview for more detailed information about the Standards for Mathematical Practice.

1. Make sense of problems and persevere in solving them.

2. Reason abstractly and quantitatively.

3. Construct viable arguments and critique the reasoning of others.

4. Model with mathematics.

5. Use appropriate tools strategically.

6. Attend to precision.

7. Look for and make use of structure.

8. Look for and express regularity in repeated reasoning.

ENDURING UNDERSTANDINGS

- Coordinate geometry can be a useful tool for understanding geometric shapes and transformations.
- Reflections, translations, and rotations are *actions* that produce congruent geometric objects.
- A dilation is a transformation that changes the size of a figure, but not the shape.
- The notation used to describe a dilation includes a scale factor and a center of dilation. A dilation of scale factor k with the center of dilation at the origin may be described by the notation (kx, ky).
- If the scale factor of a dilation is greater than 1, the image resulting from the dilation is an enlargement. If the scale factor is less than 1, the image is a reduction.
- Two shapes are similar if the lengths of all the corresponding sides are proportional and all the corresponding angles are congruent.
- Two similar figures are related by a scale factor, which is the ratio of the lengths of the corresponding sides.
- Congruent figures have the same size and shape. If the scale factor of a dilation is equal to one, the image resulting from the dilation is congruent to the original figure.
- When parallel lines are cut by a transversal, corresponding, alternate interior and alternate exterior angles are congruent.

CONCEPTS/SKILLS TO MAINTAIN

It is expected that students will have prior knowledge/experience related to the concepts and skills identified below. It may be necessary to pre-assess in order to determine if time needs to be spent on conceptual activities that help students develop a deeper understanding of these ideas.

- plotting on the coordinate plane
- angle measurement
- characteristics of 2-D and 3-D shapes
- solving equations
- operations with fractions and decimals

SELECTED TERMS AND SYMBOLS

The following terms and symbols are often misunderstood. These concepts are not an inclusive list and should not be taught in isolation. However, due to evidence of frequent difficulty and misunderstanding associated with these concepts, instructors should pay particular attention to them and how their students are able to explain and apply them.

The definitions below are for teacher reference only and are not to be memorized by the students. Students should explore these concepts using models and real life examples. Students should understand the concepts involved and be able to recognize and/or demonstrate them with words, models, pictures, or numbers.

The websites below are interactive and include a math glossary suitable for middle school students. **Note – Different sources use different definitions. Please preview any website for alignment to the definitions given in the frameworks.** The definitions below are from the Common Core State Standards Mathematics Glossary and/or the Common Core GPS Mathematics Glossary when available.

Visit http://intermath.coe.uga.edu or http://mathworld.wolfram.com to see additional definitions and specific examples of many terms and symbols used in grade 8 mathematics.

- **Alternate Exterior Angles:** Alternate exterior angles are pairs of angles formed when a third line (a transversal) crosses two other lines. These angles are on opposite sides of the transversal and are outside the other two lines. When the two other lines are parallel, the alternate exterior angles are equal.

- **Alternate Interior Angles:** Alternate interior angles are pairs of angles formed when a third line (a transversal) crosses two other lines. These angles are on opposite sides of the transversal and are in between the other two lines. When the two other lines are parallel, the alternate interior angles are equal.

- **Angle of Rotation:** The amount of rotation about a fixed point.

- **Congruent Figures:** Figures that have the same size and shape.

- **Corresponding Sides:** Sides that have the same relative positions in geometric figures.
- **Corresponding Angles:** Angles that have the same relative positions in geometric figures.

- **Dilation:** A transformation that moves each point along the ray through the point emanating from a fixed center, and multiplies distances from the center by a common scale factor.
- **Linear Pair:** Adjacent, supplementary angles. Excluding their common side, a linear pair forms a straight line.

- **Reflection:** A transformation that "flips" a figure over a line of reflection.

- **Reflection Line:** A line that is the perpendicular bisector of the segment with endpoints at a pre-image point and the image of that point after a reflection.

- **Rotation:** A transformation that turns a figure about a fixed point through a given angle and a given direction.

- **Same-Side Interior Angles:** Pairs of angles formed when a third line (a transversal) crosses two other lines. These angles are on the same side of the transversal and are between the other two lines. When the two other lines are parallel, same-side interior angles are supplementary.

- **Same-Side Exterior Angles:** Pairs of angles formed when a third line (a transversal) crosses two other lines. These angles are on the same side of the transversal and are outside the other two lines. When the two other lines are parallel, same-side exterior angles are supplementary.

- **Scale Factor:** The ratio of any two corresponding lengths of the sides of two similar figures.

- **Similar Figures:** Figures that have the same shape but not necessarily the same size.

- **Transformation:** The mapping, or movement, of all the points of a figure in a plane according to a common operation.

- **Translation:** A transformation that "slides" each point of a figure the same distance in the same direction.

- **Transversal:** A line that crosses two or more lines.

FORMATIVE ASSESSMENT LESSONS (FALs)

Formative Assessment Lessons are intended to support teachers in formative assessment. They reveal and develop students' understanding of key mathematical ideas and applications. These lessons enable teachers and students to monitor in more detail their progress towards the targets of the standards. They assess students' understanding of important concepts and problem solving performance, and help teachers and their students to work effectively together to move each student's mathematical reasoning forward.

More information on types of Formative Assessment Lessons may be found in the Comprehensive Course Guide.

SE Task: Introduction to Reflections, Translations, and Rotations

1. On your graph paper draw and label a square. Describe its original position and size.

   Rotate it 90 degrees. Translate it so that it is in the 4th quadrant.
   Reflect it over a line y="a number" so that the square is in the 1st quadrant.

   Write 2 distinctly different ways that you can get the shape back in its original position.

2. On your graph paper draw and label a triangle. Describe its original position and size.

   Rotate, Translate, and Reflect the triangle so that the one side is touching an original side in such a way that it forms a parallelogram. List your steps here:

3. On your graph paper draw and label a parallelogram. Describe its original position and size.

Rotate, Translate, and Reflect the parallelogram several times, listing your steps here:

Now, challenge a friend to get the parallelogram back into its original position! Are the steps that your friend used the reverse of your steps, or are they different?

SE TASK: Dilations in the Coordinate Plane

Adapted from Stretching and Shrinking: Similarity, *Connected Mathematics*, Dale Seymour Publications

Plot the ordered pairs given in the table to make six different figures. Draw each figure on a separate sheet of graph paper. Connect the points with line segments as follows:

- For Set 1, connect the points in order. Connect the last point in the set to the first point in the set.
- For Set 2, connect the points in order. Connect the last point in the set to the first point in the set.
- For Set 3, connect the points in order. Do not connect the last point in the set to the first point in the set.
- For Set 4, make a dot at each point (do not connect the dots).

After drawing the six figures, compare Figure 1 to each of the other figures and answer the following questions.

1. How do the coordinates of each figure compare to the coordinates of Figure 1? If possible, write general rules for making Figures 2-6.

2. Describe any similarities and/or differences between Figure 1 and each of the other figures.
   - Describe how corresponding sides compare.
   - Describe how corresponding angles compare.

3. What would be the effect of multiplying each of the coordinates in Figure 1 by ½?

4. Which figures are similar? Describe a sequence of transformations that takes Figure 1 to the similar figure.

5. Translate, reflect, rotate (between 0 and 90°), and dilate Figure 1 so that it lies entirely in Quadrant III on the coordinate plane. You may perform the transformations in any order that you choose. Draw a picture of the new figure at each step and explain the procedures you followed to get the new figure. Use coordinates to describe the transformations and give the scale factor you used. Describe the similarities and differences between your new figures and Figure 1.

Figure 1	Figure 2	Figure 3	Figure 4	Figure 5	Figure 6
Set 1	**Set 1**	**Set 1**	**Set 1**	**Set 1**	**Set 1**
(6, 4)	(12, 8)	(18, 4)	(18, 12)	(6, 12)	(8, 6)
(6, -4)	(12, -8)	(18, -4)	(18, -12)	(6, -12)	(8, -2)
(-6, -4)	(-12, -8)	(-18, -4)	(-18, -12)	(-6, -12)	(-4, -2)
(-6, 4)	(-12, 8)	(-18, 4)	(-18, 12)	(-6, 12)	(-4, 6)
Set 2	**Set 2**	**Set 2**	**Set 2**	**Set 2**	**Set 2**
(1, 1)	(2, 2)	(3, 1)	(3, 3)	(1, 3)	(3, 3)
(1, -1)	(2, -2)	(3, -1)	(3, -3)	(1, -3)	(3, 1)
(-1, -1)	(-2, -2)	(-3, -1)	(-3, -3)	(-1, -3)	(1, 1)
(-1, 1)	(-2, 2)	(-3, 1)	(-3, 3)	(-1, 3)	(1, 3)
Set 3	**Set 3**	**Set 3**	**Set 3**	**Set 3**	**Set 3**
(4, -2)	(8, -4)	(12, -2)	(12, -6)	(4, -6)	(6, 0)
(3, -3)	(6, -6)	(9, -3)	(9, -9)	(3, -9)	(5, -1)
(-3, -3)	(-6, -6)	(-9, -3)	(-9, -9)	(-3, -9)	(-1, -1)
(-4, -2)	(-8, -4)	(-12, -2)	(-12, -6)	(-4, -6)	(-2, 0)
Set 4	**Set 4**	**Set 4**	**Set 4**	**Set 4**	**Set 4**
(4, 2)	(8, 4)	(12, 2)	(12, 6)	(4, 6)	(6, 4)
(-4, 2)	(-8, 4)	(-12, 2)	(-12, 6)	(-4, 6)	(-2, 4)

SE TASK: Changing Shapes

Suppose you are going to be designing a logo for a club at your school. To prepare for this project, draw a non-rectangular shape in the coordinate plane so that portions of the shape are in each of the four quadrants. Explain what would happen to your shape if you transformed it using each of the given rules with the center of dilation at the origin.

a. $(4x, 4y)$

b. $(0.25x, 0.25y)$

c. $(2x, y)$

d. $(3x, 3y + 5)$

e. $(x + 5, y - 5)$

f. $(\frac{1}{2} x - 1, \frac{1}{2} y)$

g. Will any of the transformed figures be similar to the original figure? Explain.

h. If you make a new figure by adding 2 units to the length of each side of your shape, will the two figures be similar? Why or why not?

i. Write a general rule for transformations in the plane that produce similar figures.

SE TASK: Coordinating Reflections

Antonio and his friend Brittany were at a summer math camp that had a large *coordinate plane* drawn on the gym floor. Antonio challenged Brittany to try and mirror him as he traveled around the first quadrant.

Map Antonio's and Brittany's movements on this coordinate plane:

Antonio began at (2, 1) and walked to (3, 5); Brittany decided to begin at (-2, 1), then tried to mirror Antonio by walking to (-3, 5). Antonio jumped to (5,5) and side-stepped to (4,3); Brittany jumped to (-5, 5) then side-stepped to (-4,3). Antonio returned to (2, 1) and Brittany returned to (-2, 1).

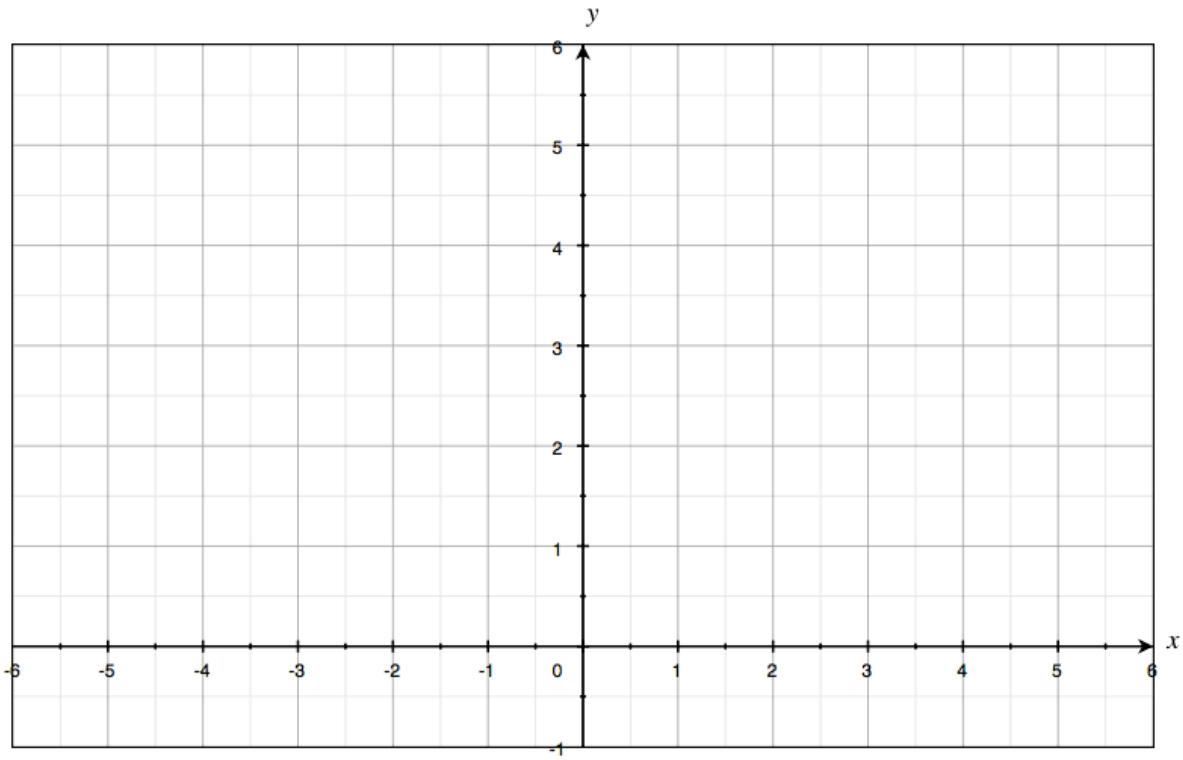

1. Did Brittany mirror Antonio?

    - If you answered no, identify the incorrect coordinates Brittany used and find the correct coordinates. Explain your decision and identify the line of symmetry she should have used as a mirror. How did you know that this should have been the line of symmetry?

    - If you answered yes, identify the line of symmetry Brittany used as a mirror. How did you know it was the line of symmetry?

2. If Brittany had instead begun at (-2,1), walked to (-4,3), side-stepped to (-5,5), jumped to (-3,5) and then returned to (-2,1), could she claim that she created a mirror image of Antonio's path? Justify your answer.

Antonio and Brittany decided to change the game and use some lettered blocks to mark points they visited on the grid. Antonio placed blocks *A*, *B*, and *C* as indicated by the points below, then drew a chalk line between them.

3. Draw this figure on a separate sheet of graph paper. Label the coordinates Antonio used, and then construct the graph of where Brittany would place her blocks if she correctly reflected Antonio's figure across the *x*-axis.

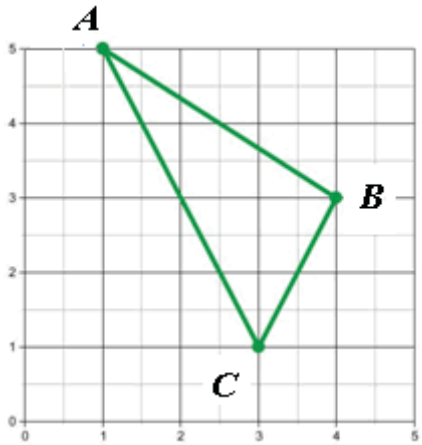

4. Describe how you determined where to place Brittany's blocks.

5. Each block Brittany placed corresponds to one that Antonio placed. List each pair of coordinates that correspond.

6. What can you observe about the distances between each of Antonio's blocks and the corresponding block Brittany placed?

7. If Antonio walked 2 feet from his block *A* toward his block *C*, and Brittany mirrored his movement by walking 2 feet from the blocks corresponding to *A* and *C*, would Brittany and Antonio be the same distance from the reflection line? How can you be certain?

8. How would you define a reflection now that you have analyzed some of the properties of reflected images using the coordinate plane?

SE TASK: Coordinating Translations

Your task is to plot any creative polygon you want on the coordinate plane, and then create polygons congruent to the one you designed using the three translations described below.

1. Translate the original polygon right 5 units. For each vertex of your original polygon in the form (x, y), what is its image's coordinates? What is the general form for the image's vertices?

2. Translate the original polygon down 4 units. For each vertex of your original polygon in the form (x, y), what is its image's coordinates? What is the general form for the image's vertices?

3. Translate the original polygon left 4 units and up 2 units. For each vertex of your original polygon in the form (x, y), what is its image's coordinates? What is the general form for the image's vertices?

The vertices of your original polygon combined with their images must be mapped to points in all four quadrants of the coordinate plane to receive full credit.

Differentiation

Provide a description of each of the following translations, where h and k can represent any number.

1. $(x + h, y + k)$

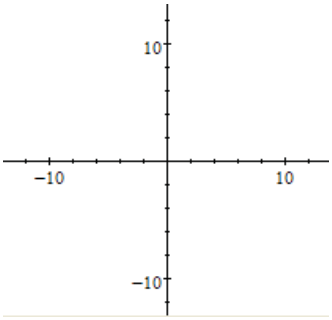

SE TASK: Coordinating Rotations

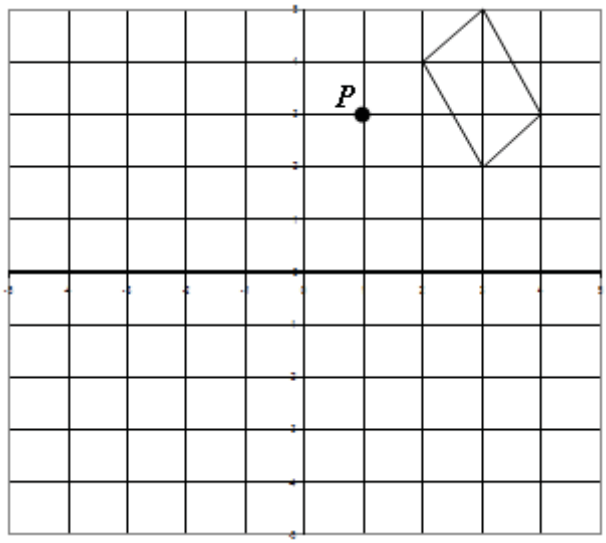

1. Label the coordinates of the polygon above.

2. Rotate the polygon 90° (counterclockwise) about the origin and label the coordinates.

3. Rotate the polygon 90° (clockwise) about the origin and label the coordinates.

4. Describe a rotation that would guarantee the point *P* (1, 3) would be inside the square formed by the vertices (5, 5), (-5, 5), (-5,-5), and (5,-5).

Formative Assessment Lesson: Representing and Combining Transformations

Source: Formative Assessment Lesson Materials from Mathematics Assessment Project
http://map.mathshell.org/materials/download.php?fileid=1368

In this lesson, students will practice using transformations.

STANDARDS ADDRESSED IN THIS TASK:

Understand congruence and similarity using physical models, transparencies, or geometry software.

MCC8.G.2 Understand that a two-dimensional figure is congruent to another if the second can be obtained from the first by a sequence of rotations, reflections, and translations; given two congruent figures, describe a sequence that exhibits the congruence between them.

STANDARDS FOR MATHEMATICAL PRACTICE:

This lesson uses all of the practices with emphasis on:

1. Make sense of problems and persevere in solving them
3. Construct viable arguments and critique the reasoning of others.
5. Use appropriate tools strategically

BACKGROUND KNOWLEDGE:

In order for students to be successful, the following skills and concepts need to be maintained:

- MCC5.G.1, MCC5.G.2, MCC6.G.3, MCC7.G.1

COMMON MISCONCEPTIONS:

- Some students will continue to mix up the x and y axis.
- Student confuses the terms horizontally and vertically.
- Students will need multiple opportunities to explore the transformation of figures so that they can appreciate that points stay the same distance apart and lines stay at the same angle after they have been rotated, reflected, and/or translated.
- Student translates rather than reflect the shape.
- Some students will mix up clockwise and counterclockwise directions.
- Students ignore the center of rotation and rotate the figure from a corner of the shape.

ESSENTIAL QUESTIONS:

- How can the coordinate plane help me understand properties of reflections, translations, and rotations?
- What is the relationship between reflections, translations, and rotations?

MATERIALS:

- See source link.

GROUPING:

- *Individual/Partner/Small Group*

TASK DESCRIPTION, DEVELOPMENT AND DISCUSSION:

Tasks and lessons from the Mathematics Assessment Project are specifically designed to help teachers effectively formatively assess their students. The way the tasks and lessons are designed gives the teacher a clear understanding of what the students are able to do and not do. Within the lesson, teachers will find suggestions and question prompts that will help guide students towards understanding. For more information access the MAP website:
http://www.map.mathshell.org/materials/background.php?subpage=formative

The task, *Representing and Combining Transformations*, is a Formative Assessment Lesson (FAL) that can be found at the
website: http://map.mathshell.org/materials/lessons.php?taskid=490&subpage=concept

The FAL document provides a clear lesson design, from the opening of the lesson to the closing of the lesson.

The PDF version of the task can be found at the link below:
http://map.mathshell.org/materials/download.php?fileid=1368

SE TASK: Playing with Dilations

Go to the following website for this investigation:
http://www.mathsnet.net/dynamic/enlarge2.html
(Mathsnet is a subscription site)

Click on "Show Values."

a. Change the scale by moving the red point on the segment in the top left corner. What do you observe when the scale is less than 1? Equal to 1? Greater than 1? As you are changing the scale, observe what is happening to the area of the red triangle and the ratio of the areas of the triangles. Describe what you observe. Why do you think this happens?

b. Move the point X to different locations outside, inside, and on the triangle. What changes in the values do you notice as you move X? Explain why you think this happens.

c. As you moved X in part b, other than the values, describe all the changes you noticed. Why do you think these changes occurred?

d. What are some real-world situations in which this might be used?

SE TASK: Similar Triangles

1. The sketch below shows two triangles, ΔABC and ΔEFG. ΔABC has an area of 12 square units, and its base (AB) is equal to 8 units. The base of ΔEFG is equal to 24 units.

a. How do you know that the triangles are similar?

b. Name the pairs of corresponding sides and the pairs of corresponding angles. How are the corresponding sides related and how are the corresponding angles related? Why is this true?

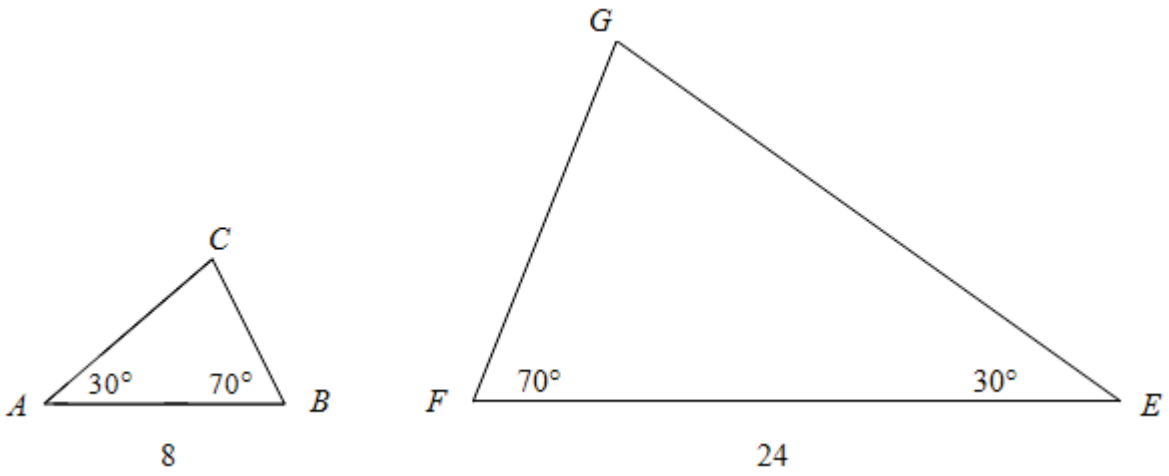

2. The sketch below shows two triangles, ΔMNO and ΔPQR.

a. How do you know that the triangles are similar?

b. Name the pairs of corresponding sides and the pairs of corresponding angles. How are the corresponding sides related and how are the corresponding angles related? Why is this true?

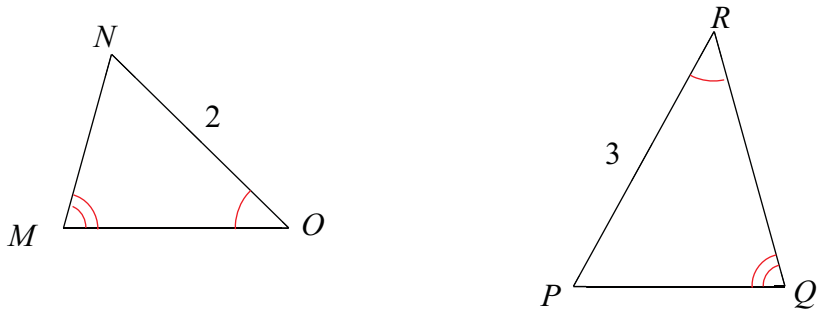

3. The sketch below shows two triangles, ΔXYZ and ΔHFG.

a. How do you know that the triangles are similar?

b. Name the pairs of corresponding sides and the pairs of corresponding angles. How are the corresponding sides related and how are the corresponding angles related? Why is this true?

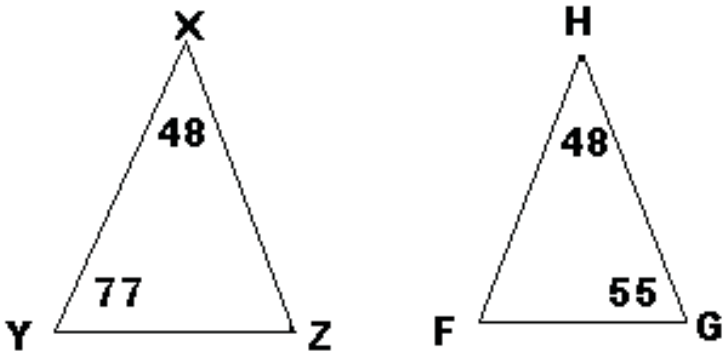

4. The sketch below shows two triangles, ΔLMN and ΔFEG.

a. How do you know that the triangles are similar? Is there anything else you can say about the two triangles?

b. Name the pairs of corresponding sides and the pairs of corresponding angles. How are the corresponding sides related and how are the corresponding angles related? Why is this true?

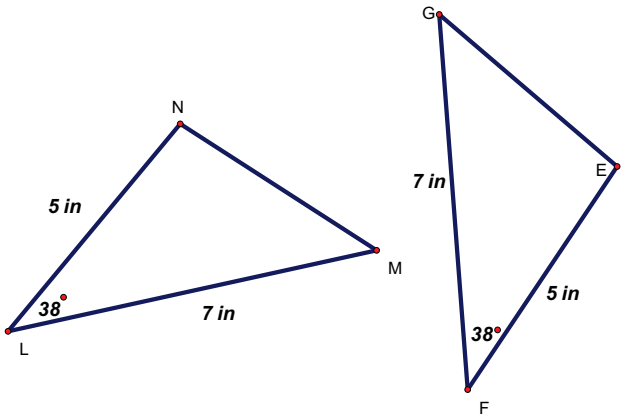

SE TASK: Lunch Lines

Paul, Jane, Justin, Sarah, and Opal were finished with lunch and began playing with drink straws. Each one was making a line design using either 3 or 4 straws. They had just come from math class where they had been studying special angles. Paul pulled his pencil out of his book bag and labeled some of the angles and lines. He then challenged himself and the others to find all the labeled angle measurements and to determine whether the lines that appear to be parallel really could be parallel.

Paul's straw design

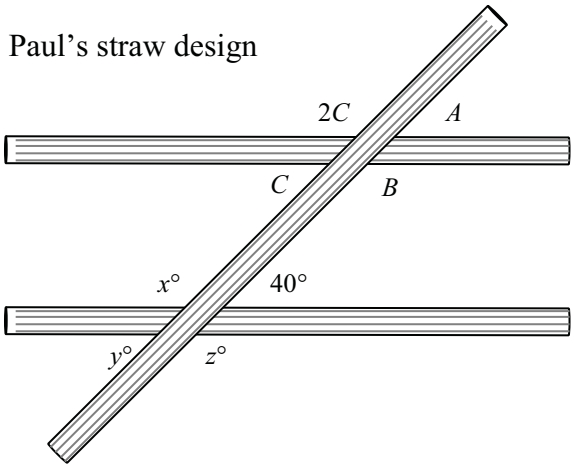

Jane's straw design

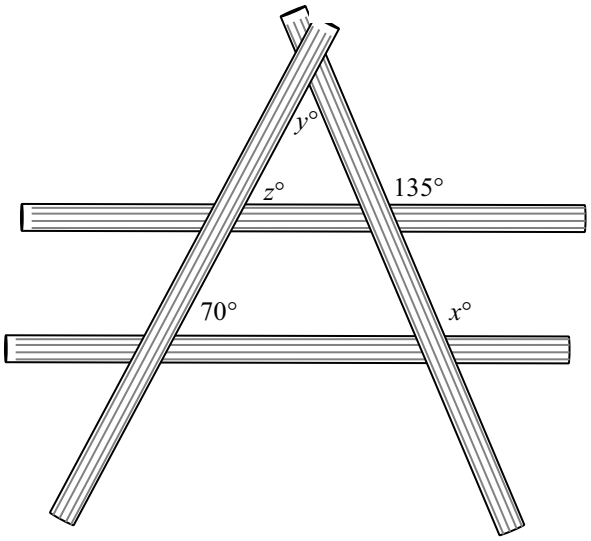

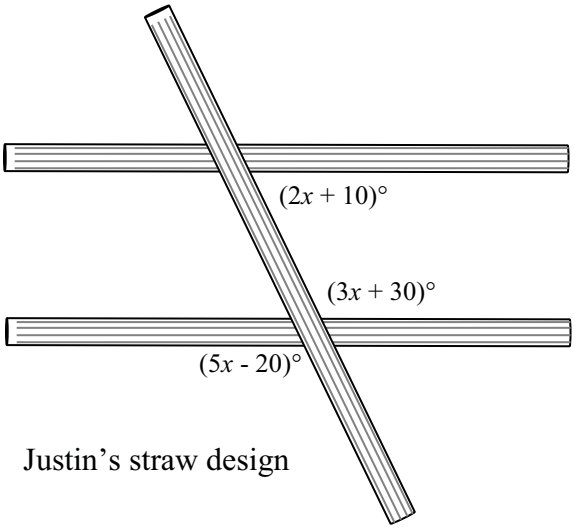

Justin's straw design

- Find all of the labeled angle measurements, assuming the lines that appear parallel are parallel.
- Determine whether the lines that appear to be parallel really could be parallel.
- Explain the reasoning for your results.

SE TASK: Window "Pain"

Part 1:

Your best friend's newest blog entry on FaceBook reads:

Last night was the worst night ever! I was playing ball in the street with my buds when, yes, you guessed it, I broke my neighbor's front window. Every piece of glass in the window broke! Man, my Mom was sooooooooooo mad at me! My neighbor was cool, but Mom is making me replace the window. Bummer!

It is a Tudor-style house with windows that look like the picture below.

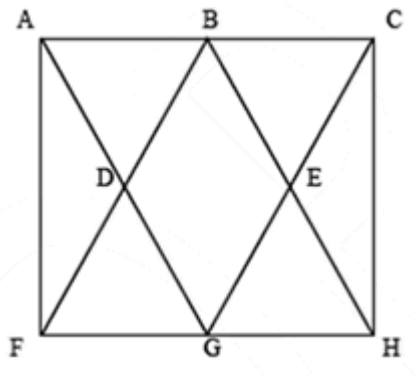

I called the Clearview Window Company to place an order. What was really weird was that the only measurements that the guy wanted were $\angle BAD$ (60°), $\angle BCE$ (60°), and $\overline{AG}$ (28 inches).

I told him it was a standard rectangular window and that I had measured everything, but he told me not to worry because he could figure out the other measurements. It is going to cost me $20 per square foot, so I need to figure out how to make some money real quick. How did the window guy know all of the other measurements and how much is this going to cost me?

Because you are such a good best friend, you are going to reply to the blog by emailing the answers to the questions on the blog along with detailed explanations about how to find every angle measurement and the lengths of each edge of the glass pieces. You will also explain how to figure out the amount of money he will need.

Part 2:
(Two weeks later)

You just received a text message from your best friend and were told that the order of glass had been delivered to the house by Package Express. Unfortunately, one of the pieces was broken upon arrival and needed to be reordered by Clearview Window Company. Because you are very curious, you think it would be a good idea to determine the probability of each piece of glass being the one broken.

Write another email to your friend that explains the probabilities and how you determined them.